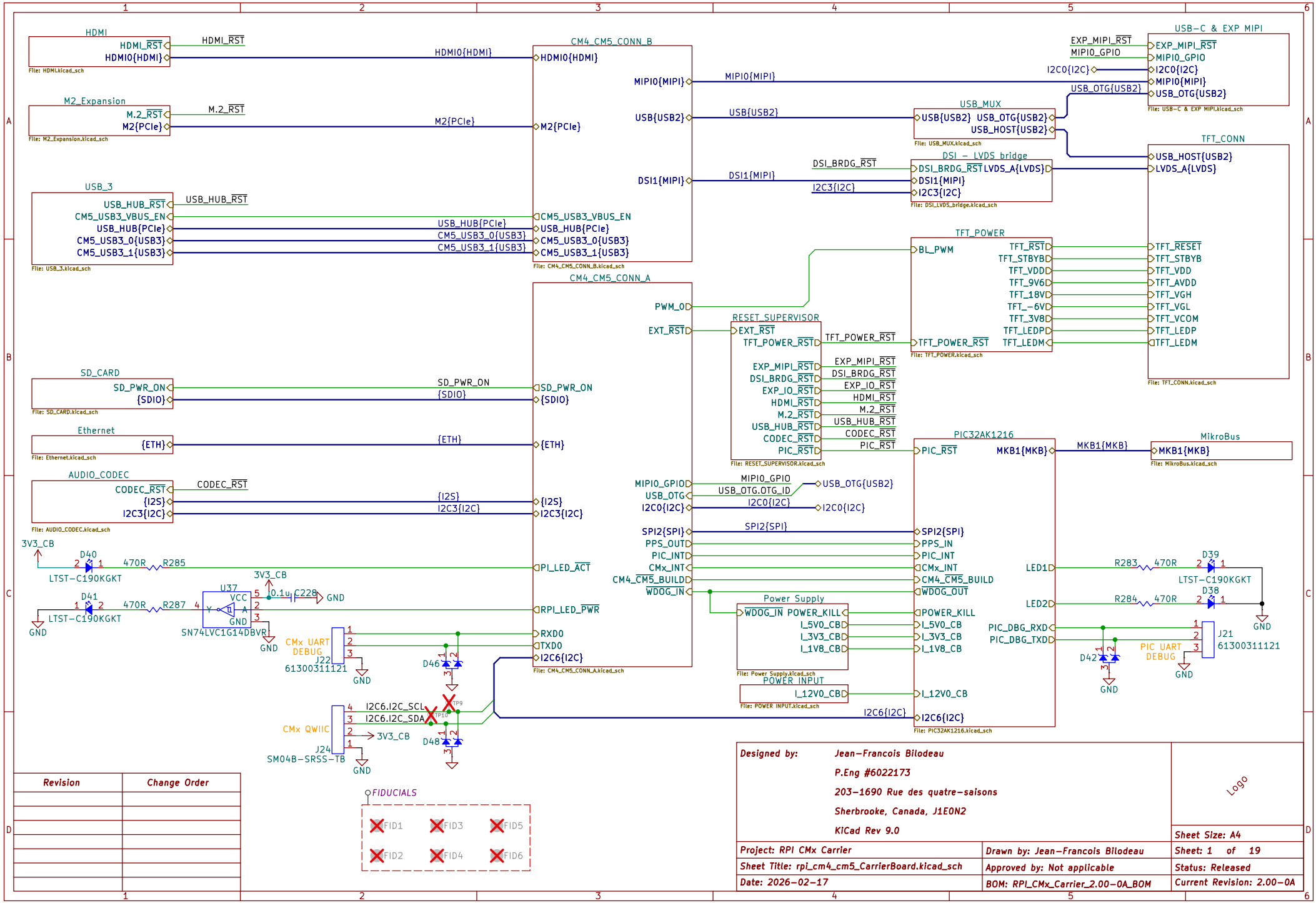
HDMI
HDMI_RST
HDMI0{HDMI}
File: HDMI.kicad_sch
M2_Expansion
M.2_RST
M2{PCIe}
File: M2_Expansion.kicad_sch
USB_3
USB_HUB_RST
CM5_USB3_VBUS_EN
USB_HUB{PCIe}
CM5_USB3_0{USB3}
CM5_USB3_1{USB3}
File: USB_3.kicad_sch
SD_CARD
SD_PWR_ON
{SDIO}
File: SD_CARD.kicad_sch
Ethernet
{ETH}
File: Ethernet.kicad_sch
AUDIO_CODEC
CODEC_RST
{I2S}
I2C3{I2C}
File: AUDIO_CODEC.kicad_sch
CM4_CM5_CONN_B
MIPI0{MIPI}
USB{USB2}
DSI1{MIPI}
File: CM4_CM5_CONN_B.kicad_sch
CM4_CM5_CONN_A
PWM_0
EXT_RST
MIPI0_GPIO
USB_OTG
SPI2{SPI}
PPS_OUT
PIC_INT
CMx_INT
CM4_CM5_BUILD
WDOG_IN
PI_LED_ACT
RPI_LED_PWR
RXD0
TXD0
File: CM4_CM5_CONN_A.kicad_sch
USB-C & EXP MIPI
EXP_MIPI_RST
MIPI0_GPIO
I2C0{I2C}
USB_OTG{USB2}
File: USB-C & EXP MIPI.kicad_sch
USB_MUX
USB_HOST{USB2}
File: USB_MUX.kicad_sch
DSI – LVDS bridge
DSI_BRDG_RST
LVDS_A{LVDS}
File: DSI_LVDS_bridge.kicad_sch
TFT_CONN
File: TFT_CONN.kicad_sch
TFT_POWER
BL_PWM
TFT_RST
TFT_STBYB
TFT_VDD
TFT_9V6
TFT_18V
TFT_–6V
TFT_3V8
TFT_LEDP
TFT_LEDM
TFT_POWER_RST
File: TFT_POWER.kicad_sch
RESET_SUPERVISOR
File: RESET_SUPERVISOR.kicad_sch
PIC32AK1216
MKB1{MKB}
LED1
LED2
PIC_DBG_RXD
PIC_DBG_TXD
POWER_KILL
I_5V0_CB
I_3V3_CB
I_1V8_CB
I_12V0_CB
I2C6{I2C}
File: PIC32AK1216.kicad_sch
MikroBus
File: MikroBus.kicad_sch
Power Supply
File: Power Supply.kicad_sch
POWER INPUT
File: POWER INPUT.kicad_sch
3V3_CB
D40
LTST-C190KGKT
470R
R285
D41
R287
U37
VCC
GND
SN74LVC1G14DBVR
0.1u
C228
CMx UART DEBUG
J22
61300311121
D46
CMx QWIIC
J24
SM04B-SRSS-TB
I2C6.I2C_SCL
I2C6.I2C_SDA
TP9
TP10
D48
R283
D39
R284
D38
D42
PIC UART DEBUG
J21
FIDUCIALS
FID1
FID2
FID3
FID4
FID5
FID6
Revision
Change Order
Designed by: Jean-Francois Bilodeau
P.Eng #6022173
203-1690 Rue des quatre-saisons
Sherbrooke, Canada, J1E0N2
KiCad Rev 9.0
Logo
Project: RPI CMx Carrier
Drawn by: Jean-Francois Bilodeau
Sheet Size: A4
Sheet Title: rpi_cm4_cm5_CarrierBoard.kicad_sch
Approved by: Not applicable
Sheet: 1 of 19
Status: Released
Date: 2026-02-17
BOM: RPI_CMx_Carrier_2.00-0A_BOM
Current Revision: 2.00-0A

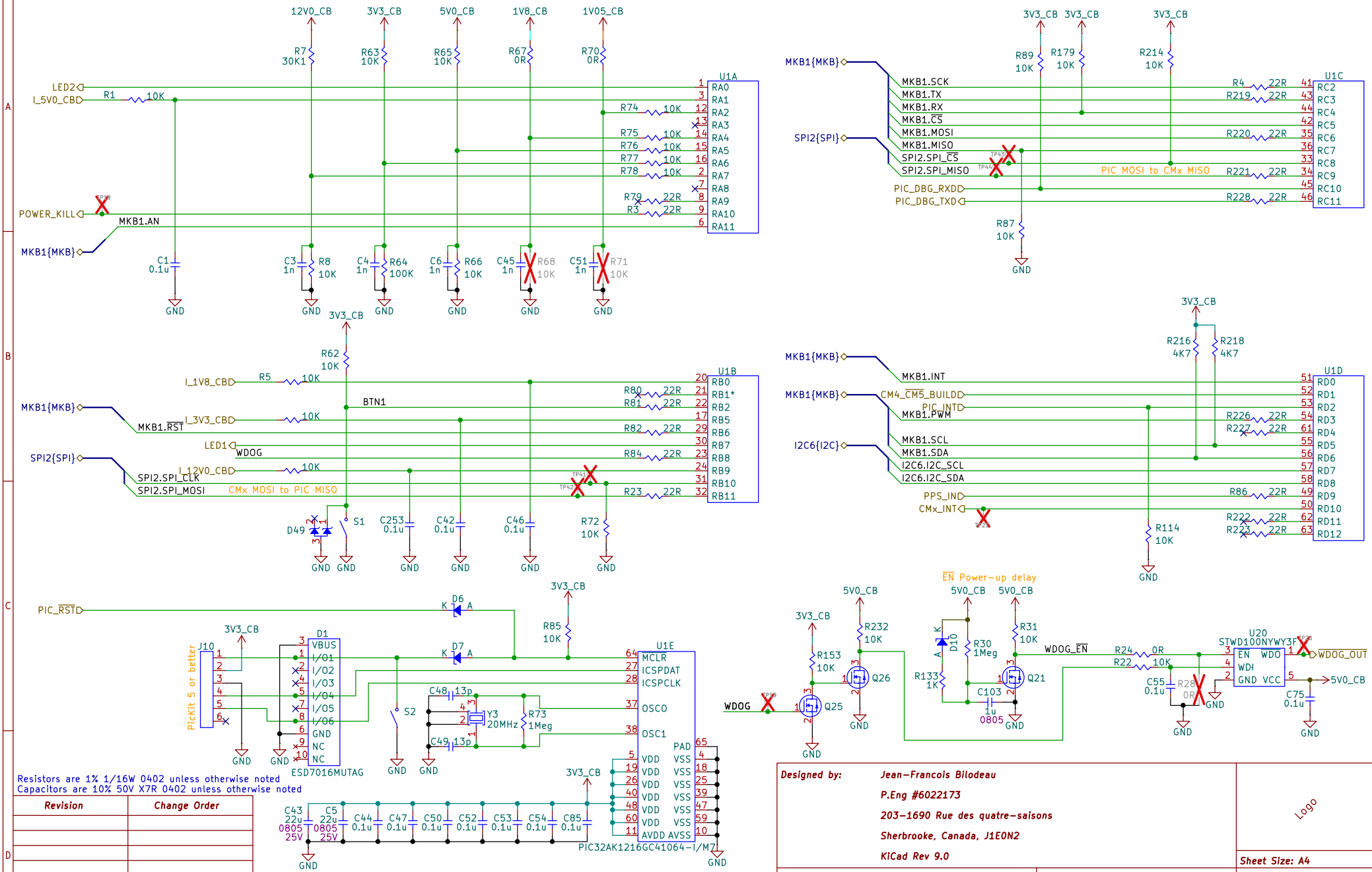
12V0_CB
3V3_CB
5V0_CB
1V8_CB
1V05_CB
U1A
LED2
I_5V0_CB
POWER_KILL
MKB1.AN
MKB1{MKB}
U1B
I_1V8_CB
I_3V3_CB
I_12V0_CB
MKB1.RST
LED1
WDOG
SPI2{SPI}
SPI2.SPI_CLK
SPI2.SPI_MOSI
CMx MOSI to PIC MISO
BTN1
U1C
MKB1.SCK
MKB1.TX
MKB1.RX
MKB1.CS
MKB1.MOSI
MKB1.MISO
SPI2.SPI_CS
SPI2.SPI_MISO
PIC MOSI to CMx MISO
PIC_DBG_RXD
PIC_DBG_TXD
U1D
MKB1.INT
CM4_CM5_BUILD
PIC_INT
MKB1.PWM
MKB1.SCL
MKB1.SDA
I2C6{I2C}
I2C6.I2C_SCL
I2C6.I2C_SDA
PPS_IN
CMx_INT
PIC_RST
J10
PicKit 5 or better
D1
ESD7016MUTAG
U1E
MCLR
ICSPDAT
ICSPCLK
OSCO
OSC1
PAD
VDD
VSS
AVDD AVSS
PIC32AK1216GC41064-I/M7
Y3
20MHz
EN Power-up delay
WDOG_EN
WDOG
U20
STWD100NYWY3F
EN WDO
WDI
GND VCC
WDOG_OUT
5V0_CB
Resistors are 1% 1/16W 0402 unless otherwise noted
Capacitors are 10% 50V X7R 0402 unless otherwise noted
Revision
Change Order
Designed by: Jean-Francois Bilodeau
P.Eng #6022173
203-1690 Rue des quatre-saisons
Sherbrooke, Canada, J1E0N2
KiCad Rev 9.0
Logo
Project: RPI CMx Carrier
Drawn by: Jean-Francois Bilodeau
Sheet Size: A4
Sheet Title: PIC32AK1216.kicad_sch
Approved by: Not applicable
Sheet: 2 of 19
Status: Released
Date: 2026-02-17
BOM: RPI_CMx_Carrier_2.00-0A_BOM
Current Revision: 2.00-0A

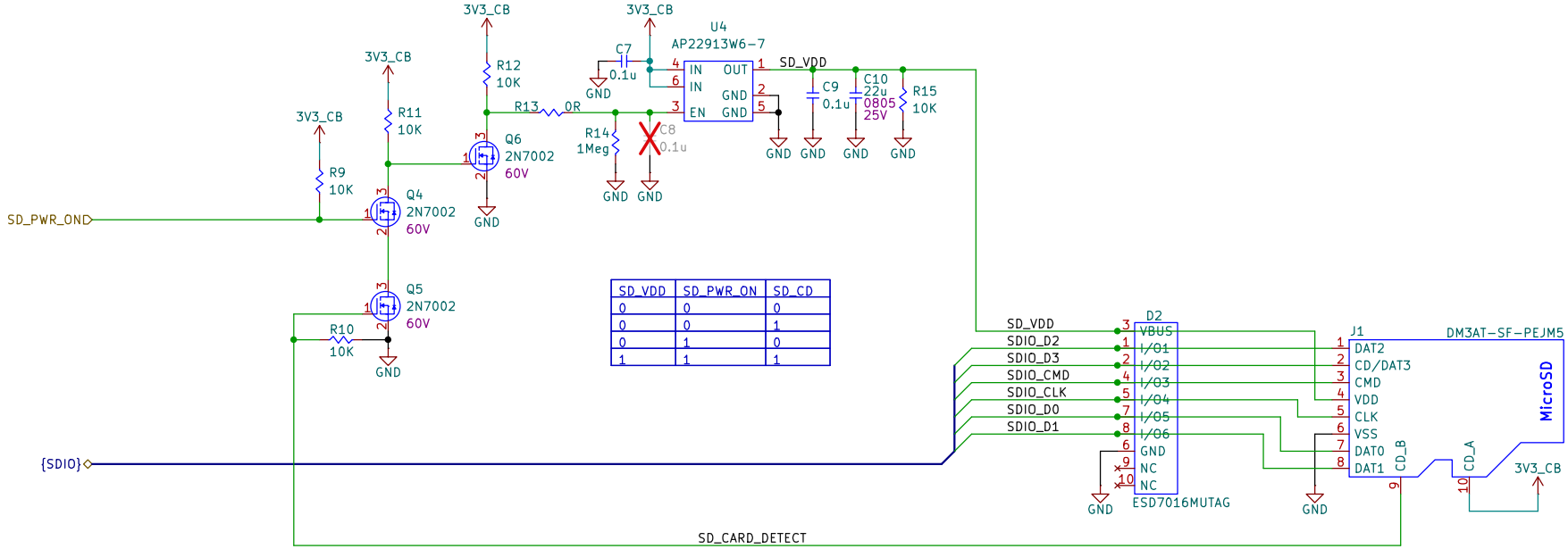

SD_VDD	SD_PWR_ON	SD_CD
0	0	0
0	0	1
0	1	0
1	1	1

Resistors are 1% 1/16W 0402 unless otherwise noted
Capacitors are 10% 50V X7R 0402 unless otherwise noted

Revision	Change Order

Designed by: Jean-Francois Bilodeau
P.Eng #6022173
203-1690 Rue des quatre-saisons
Sherbrooke, Canada, J1E0N2
KiCad Rev 9.0

Logo

Project: RPI CMx Carrier	Drawn by: Jean-Francois Bilodeau	Sheet Size: A4
Sheet Title: SD_CARD.kicad_sch	Approved by: Not applicable	Sheet: 3 of 19
Date: 2026-02-17	BOM: RPI_CMx_Carrier_2.00-0A_BOM	Status: Released
		Current Revision: 2.00-0A

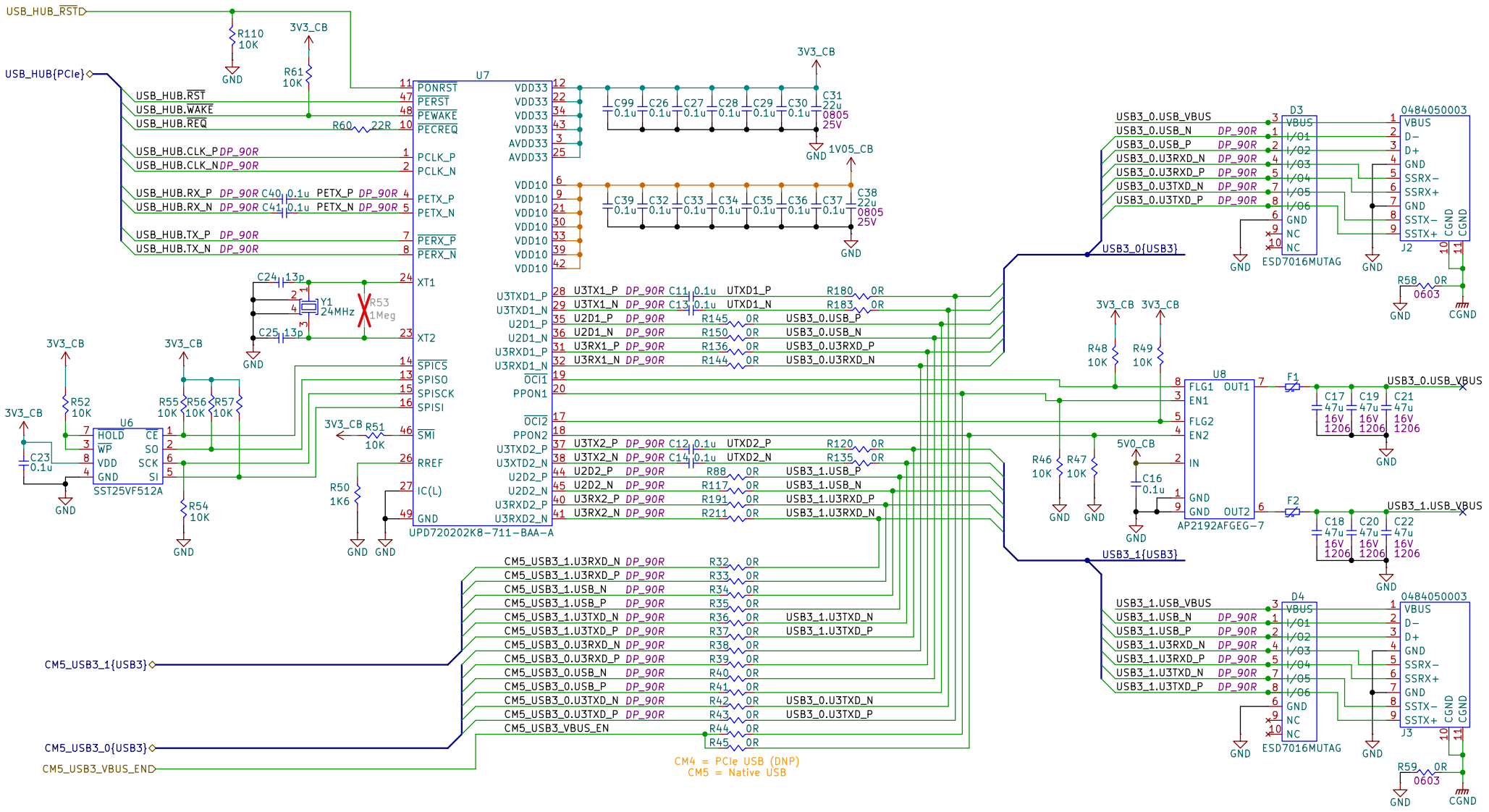

Resistors are 1% 1/16W 0402 unless otherwise noted
Capacitors are 10% 50V X7R 0402 unless otherwise noted

Revision	Change Order

Designed by: Jean-Francois Bilodeau
P.Eng #6022173
203-1690 Rue des quatre-saisons
Sherbrooke, Canada, J1E0N2
KiCad Rev 9.0

Logo

Project: RPI CMx Carrier	Drawn by: Jean-Francois Bilodeau	Sheet Size: A4
Sheet Title: USB_3.kicad_sch	Approved by: Not applicable	Sheet: 4 of 19
Date: 2026-02-17	BOM: RPI_CMx_Carrier_2.00-0A_BOM	Status: Released
		Current Revision: 2.00-0A

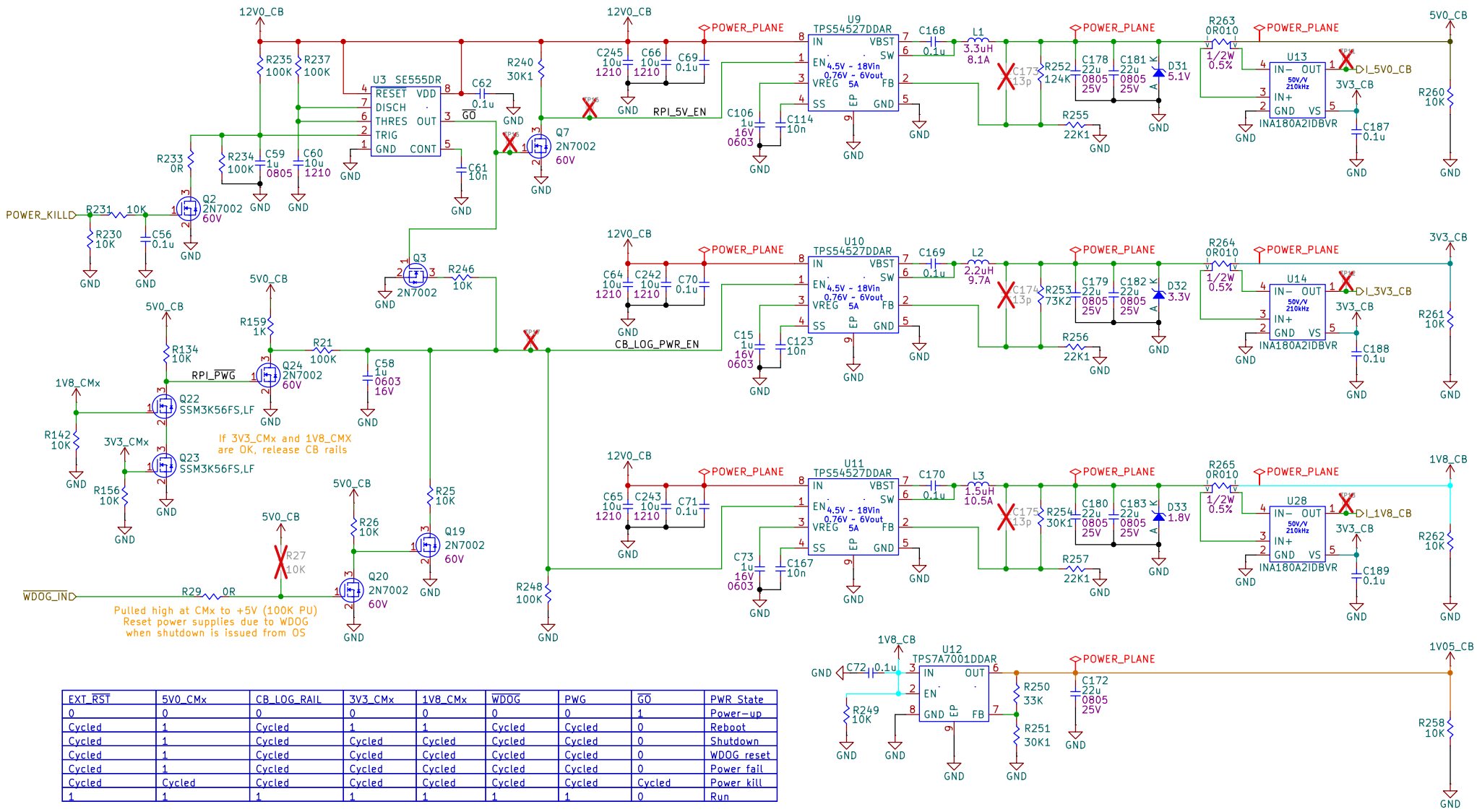

EXT_RST	5V0_CMx	CB_LOG_RAIL	3V3_CMx	1V8_CMx	WDOG	PWG	GO	PWR State
0	0	0	0	0	0	0	1	Power-up
Cycled	1	Cycled	1	1	Cycled	Cycled	0	Reboot
Cycled	1	Cycled	Cycled	Cycled	Cycled	Cycled	0	Shutdown
Cycled	1	Cycled	Cycled	Cycled	Cycled	Cycled	0	WDOG reset
Cycled	1	Cycled	Cycled	Cycled	Cycled	Cycled	0	Power fail
Cycled	Cycled	Cycled	Cycled	Cycled	Cycled	Cycled	Cycled	Power kill
1	1	1	1	1	1	1	0	Run

Power rail	12V0_CB	5V0_CB	3V3_CB	1V8_CB	1V05_CB
V(min)	11.60V	4.75V	3.135V	1.71V	0.9975V
V(nom)	12.00V	5.00V	3.30V	1.80V	1.05V
V(max)	12.40V	5.25V	3.465V	1.89V	1.1025V
I(max)	2.6A	3A	3.5A	0.8A	0.6A
Efficiency	N/A	90%	90%	85%	58%

Power rail	Voltage monitor
12V0_CB	2.99V ± 5%
5V0_CB	2.50V ± 5%
3V3_CB	3.00V ± 5%
1V8_CB	1.80V ± 5%
1V05_CB	1.05V ± 5%

Current sense	Output voltage
1A	0.50V ± 5%
2A	1.00V ± 5%
3A	1.50V ± 5%
4A	2.00V ± 5%
5A	2.50V ± 5%

Resistors are 1% 1/16W 0402 unless otherwise noted
Capacitors are 10% 50V X7R 0402 unless otherwise noted

Revision	Change Order

Designed by: Jean-Francois Bilodeau
P.Eng #6022173
203-1690 Rue des quatre-saisons
Sherbrooke, Canada, J1E0N2
KiCad Rev 9.0

Logo

Sheet Size: A4

Project: RPI CMx Carrier	Drawn by: Jean-Francois Bilodeau	Sheet: 5 of 19
Sheet Title: Power Supply.kicad_sch	Approved by: Not applicable	Status: Released
Date: 2026-02-17	BOM: RPI_CMx_Carrier_2.00-0A_BOM	Current Revision: 2.00-0A

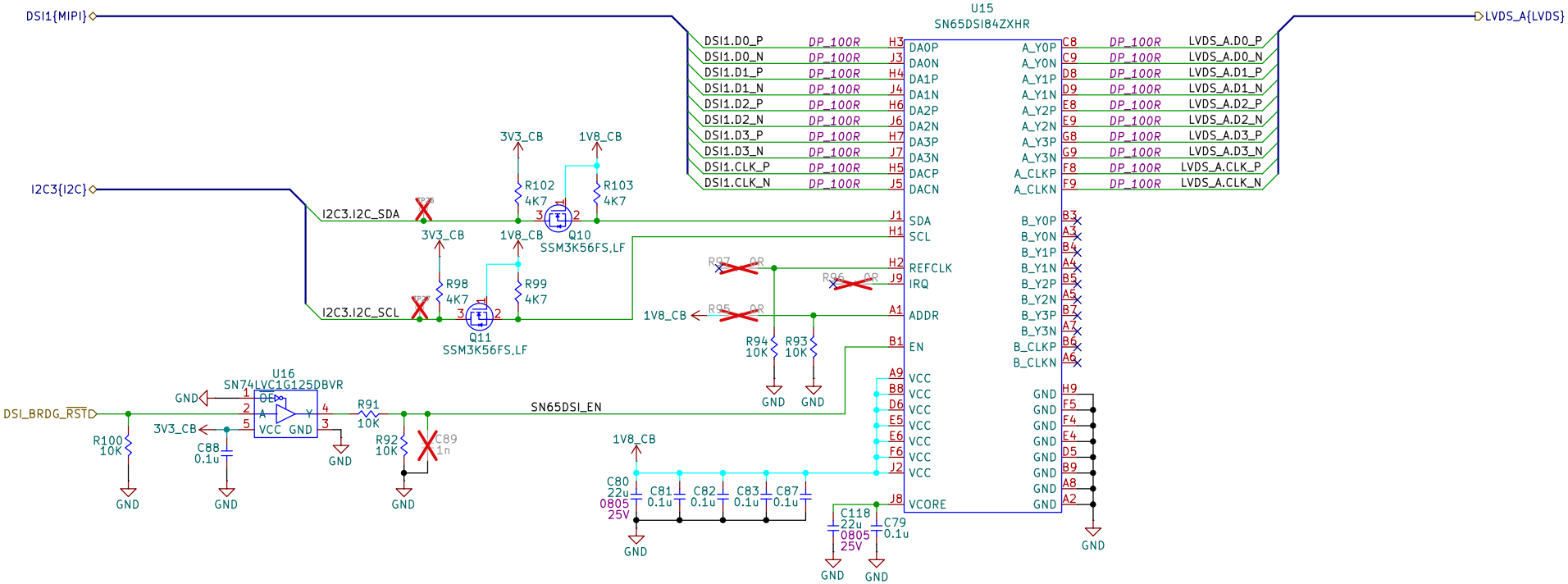

Resistors are 1% 1/16W 0402 unless otherwise noted
Capacitors are 10% 50V X7R 0402 unless otherwise noted

Revision	Change Order

Designed by: Jean-Francois Bilodeau P.Eng #6022173 203-1690 Rue des quatre-saisons Sherbrooke, Canada, J1E0N2 KiCad Rev 9.0		Logo Sheet Size: A4
Project: RPI CMx Carrier	Drawn by: Jean-Francois Bilodeau	Sheet: 6 of 19
Sheet Title: DSI_LVDS_bridge.kicad_sch	Approved by: Not applicable	Status: Released
Date: 2026-02-17	BOM: RPI_CMx_Carrier_2.00-0A_BOM	Current Revision: 2.00-0A

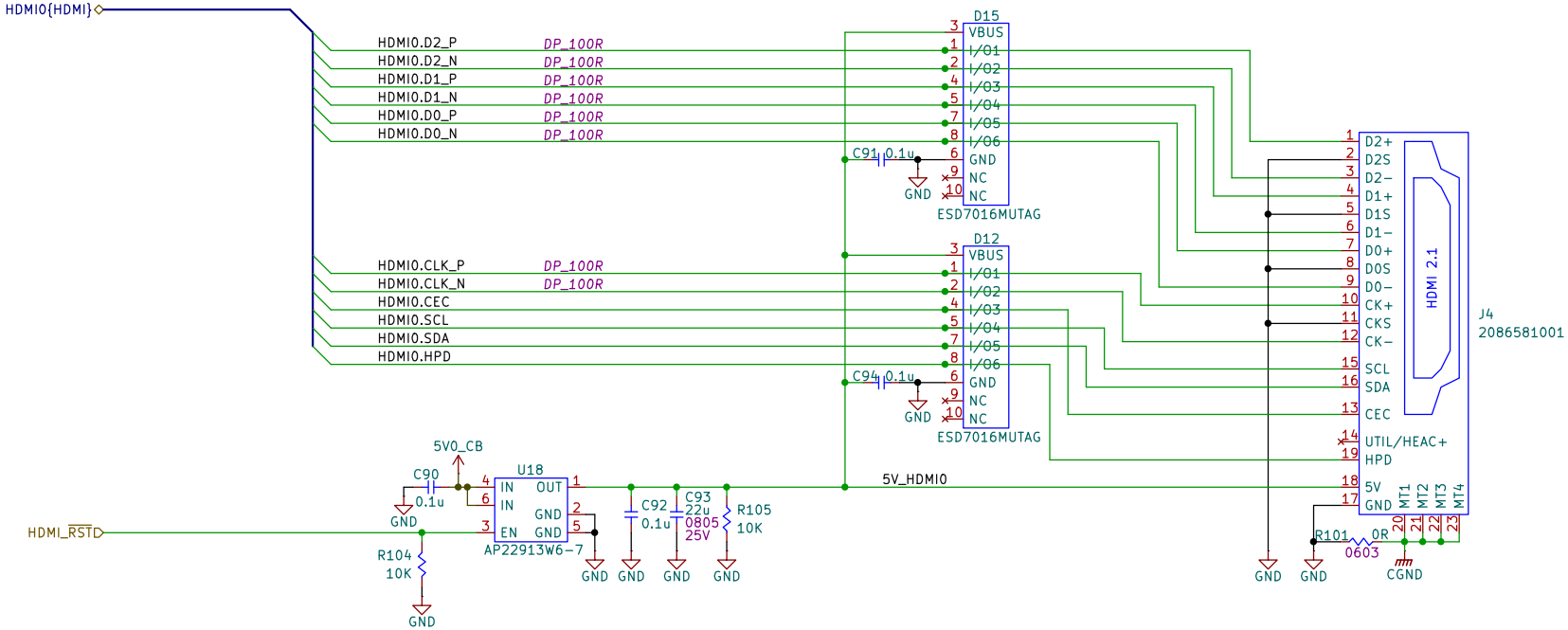

Resistors are 1% 1/16W 0402 unless otherwise noted
Capacitors are 10% 50V X7R 0402 unless otherwise noted

Revision	Change Order

Designed by: Jean-Francois Bilodeau P.Eng #6022173 203-1690 Rue des quatre-saisons Sherbrooke, Canada, J1E0N2 KiCad Rev 9.0		Logo
Project: RPI CMx Carrier	Drawn by: Jean-Francois Bilodeau	Sheet Size: A4
Sheet Title: HDMI.kicad_sch	Approved by: Not applicable	Sheet: 7 of 19
Date: 2026-02-17	BOM: RPI_CMx_Carrier_2.00-0A_BOM	Status: Released
		Current Revision: 2.00-0A

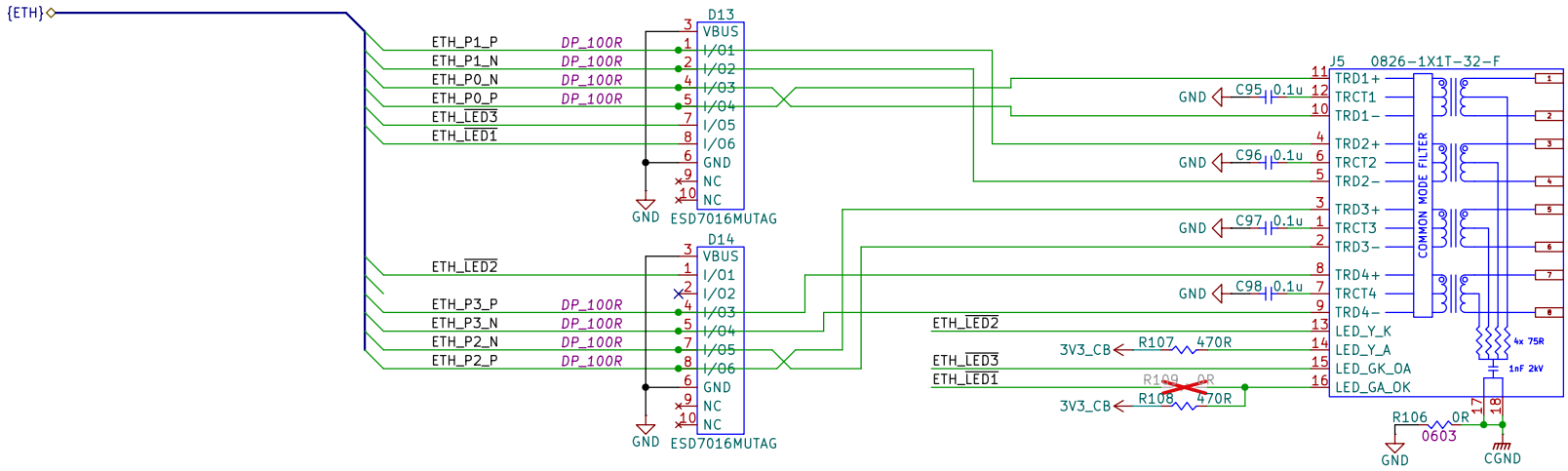

Resistors are 1% 1/16W 0402 unless otherwise noted
Capacitors are 10% 50V X7R 0402 unless otherwise noted

Revision	Change Order

Designed by: Jean-Francois Bilodeau P.Eng #6022173 203-1690 Rue des quatre-saisons Sherbrooke, Canada, J1E0N2 KiCad Rev 9.0		Logo Sheet Size: A4
Project: RPI CMx Carrier	Drawn by: Jean-Francois Bilodeau	Sheet: 8 of 19
Sheet Title: Ethernet.kicad_sch	Approved by: Not applicable	Status: Released
Date: 2026-02-17	BOM: RPI_CMx_Carrier_2.00-0A_BOM	Current Revision: 2.00-0A

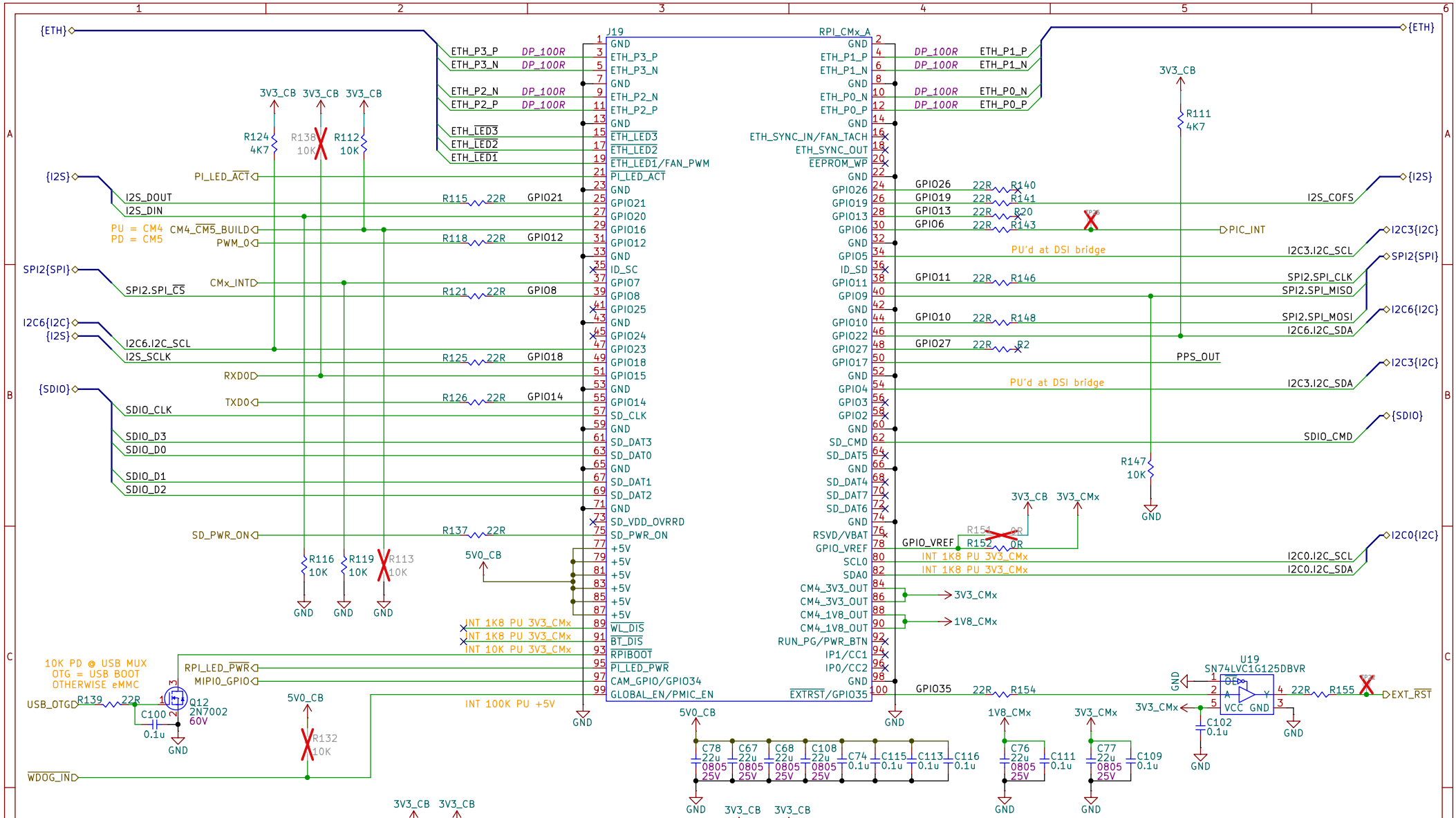
J19
RPI_CMx_A
{ETH}
{I2S}
SPI2{SPI}
I2C6{I2C}
{SDIO}
I2C3{I2C}
I2C0{I2C}
ETH_P3_P
ETH_P3_N
ETH_P2_N
ETH_P2_P
ETH_LED3
ETH_LED2
ETH_LED1
PI_LED_ACT
I2S_DOUT
I2S_DIN
PU = CM4
PD = CM5
CM4_CM5_BUILD
PWM_0
SPI2.SPI_CS
CMx_INT
I2C6.I2C_SCL
I2S_SCLK
RXD0
TXD0
SDIO_CLK
SDIO_D3
SDIO_D0
SDIO_D1
SDIO_D2
SD_PWR_ON
10K PD @ USB MUX
OTG = USB BOOT
OTHERWISE eMMC
USB_OTGD
Q12
2N7002
60V
WDOG_IND
INT 1K8 PU 3V3_CMx
INT 10K PU 3V3_CMx
INT 100K PU +5V
RPI_LED_PWR
MIPI0_GPIO
ETH_P1_P
ETH_P1_N
ETH_P0_N
ETH_P0_P
ETH_SYNC_IN/FAN_TACH
ETH_SYNC_OUT
EEPROM_WP
PU'd at DSI bridge
I2S_COFS
PIC_INT
SPI2.SPI_CLK
SPI2.SPI_MISO
SPI2.SPI_MOSI
I2C6.I2C_SDA
PPS_OUT
I2C3.I2C_SCL
I2C3.I2C_SDA
SDIO_CMD
RSVD/VBAT
GPIO_VREF
I2C0.I2C_SCL
I2C0.I2C_SDA
CM4_3V3_OUT
CM4_1V8_OUT
RUN_PG/PWR_BTN
IP1/CC1
IP0/CC2
EXTRST/GPIO35
EXT_RST
U19
SN74LVC1G125DBVR
U21
MCP7940NT-I/MS
Y2
32.768kHz
J7
2998TR
D16
3.0V 6.8mm
Resistors are 1% 1/16W 0402 unless otherwise noted
Capacitors are 10% 50V X7R 0402 unless otherwise noted
Revision
Change Order
Designed by: Jean-Francois Bilodeau
P.Eng #6022173
203-1690 Rue des quatre-saisons
Sherbrooke, Canada, J1E0N2
KiCad Rev 9.0
Logo
Project: RPI CMx Carrier
Drawn by: Jean-Francois Bilodeau
Sheet Size: A4
Sheet Title: CM4_CM5_CONN_A.kicad_sch
Approved by: Not applicable
Sheet: 9 of 19
Status: Released
Date: 2026-02-17
BOM: RPI_CMx_Carrier_2.00-0A_BOM
Current Revision: 2.00-0A

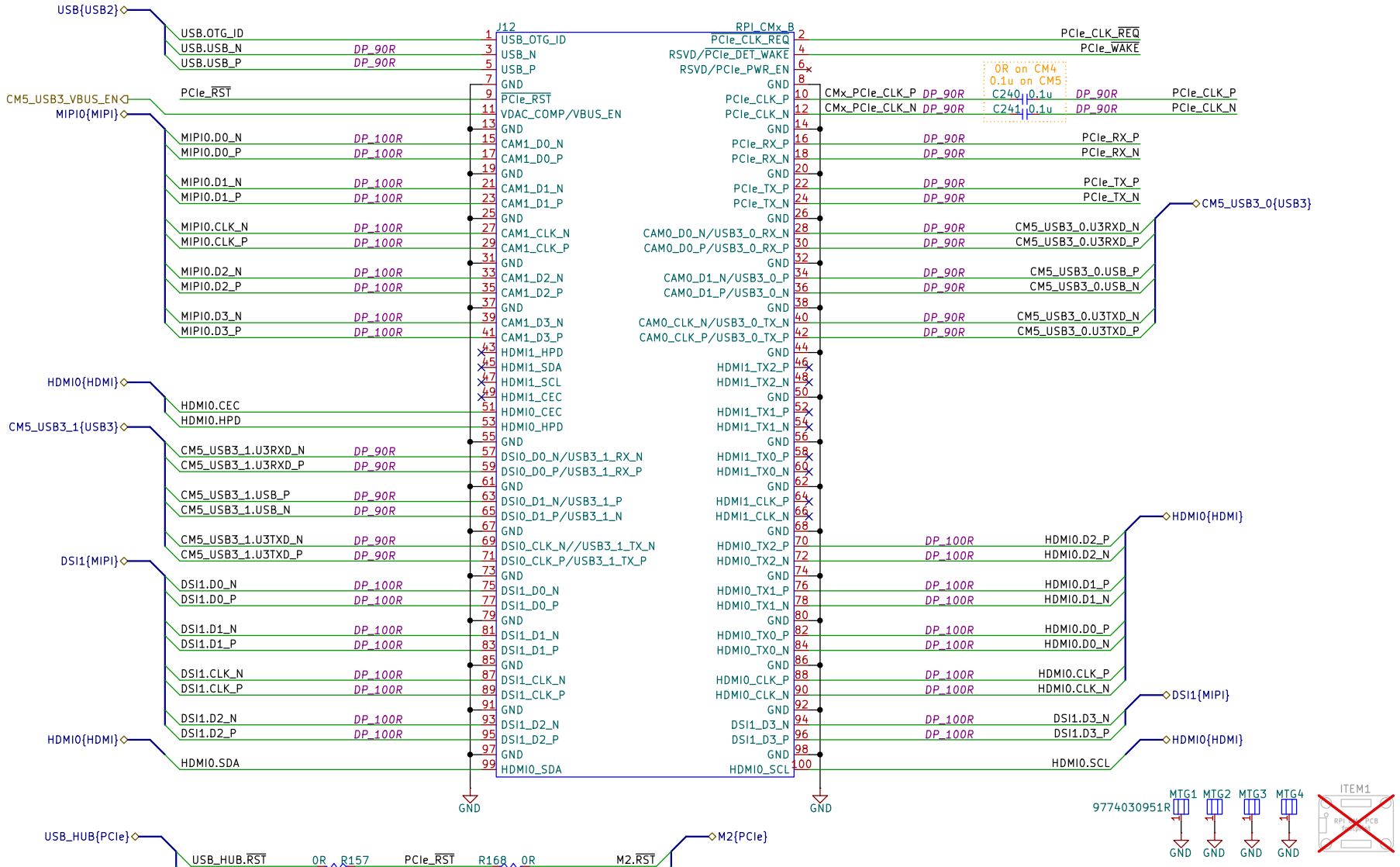

Resistors are 1% 1/16W 0402 unless otherwise noted
Capacitors are 10% 50V X7R 0402 unless otherwise noted

Revision	Change Order

Designed by: Jean-Francois Bilodeau
P.Eng #6022173
203-1690 Rue des quatre-saisons
Sherbrooke, Canada, J1E0N2
KiCad Rev 9.0

Logo

Project: RPI CMx Carrier	Drawn by: Jean-Francois Bilodeau	Sheet Size: A4
Sheet Title: CM4_CM5_CONN_B.kicad_sch	Approved by: Not applicable	Sheet: 10 of 19
Date: 2026-02-17	BOM: RPI_CMx_Carrier_2.00-0A_BOM	Status: Released
		Current Revision: 2.00-0A

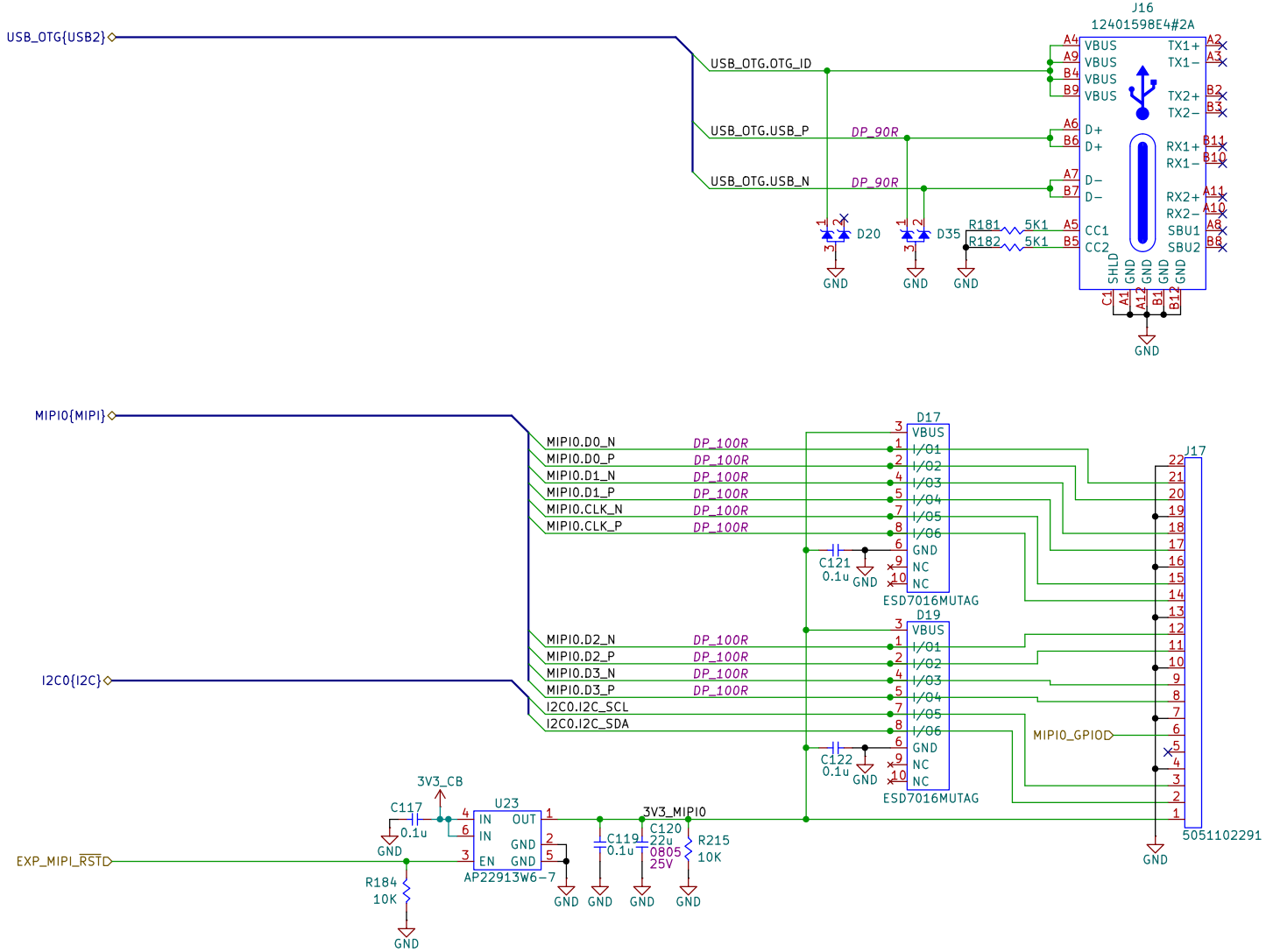

Revision	Change Order

Designed by: Jean-Francois Bilodeau
P.Eng #6022173
203-1690 Rue des quatre-saisons
Sherbrooke, Canada, J1E0N2
KiCad Rev 9.0

Logo

Project: RPI CMx Carrier	Drawn by: Jean-Francois Bilodeau	Sheet Size: A4
Sheet Title: USB-C & EXP MIPI.kicad_sch	Approved by: Not applicable	Sheet: 11 of 19
Date: 2026-02-17	BOM: RPI_CMx_Carrier_2.00-0A_BOM	Status: Released
		Current Revision: 2.00-0A

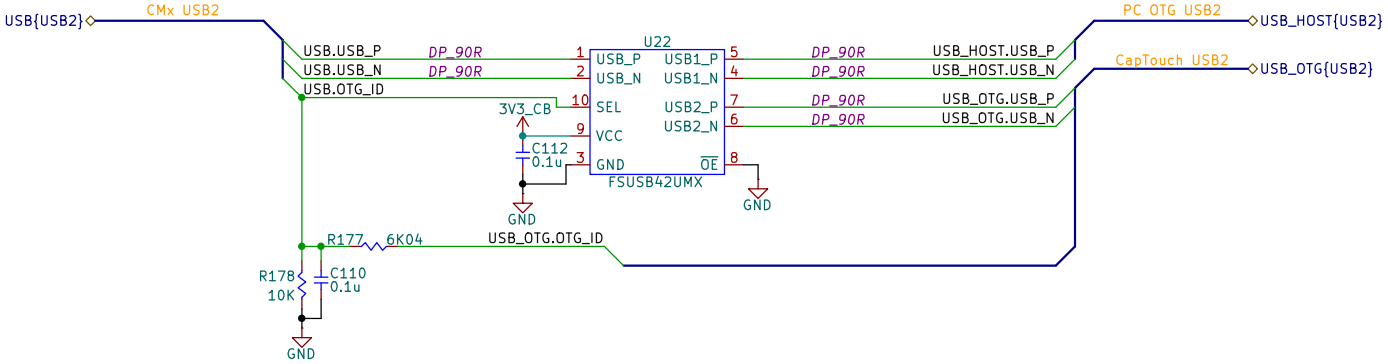

Resistors are 1% 1/16W 0402 unless otherwise noted
Capacitors are 10% 50V X7R 0402 unless otherwise noted

Revision	Change Order

Designed by: Jean-Francois Bilodeau P.Eng #6022173 203-1690 Rue des quatre-saisons Sherbrooke, Canada, J1E0N2 KiCad Rev 9.0		Logo Sheet Size: A4
Project: RPI CMx Carrier	Drawn by: Jean-Francois Bilodeau	Sheet: 12 of 19
Sheet Title: USB_MUX.kicad_sch	Approved by: Not applicable	Status: Released
Date: 2026-02-17	BOM: RPI_CMx_Carrier_2.00-0A_BOM	Current Revision: 2.00-0A

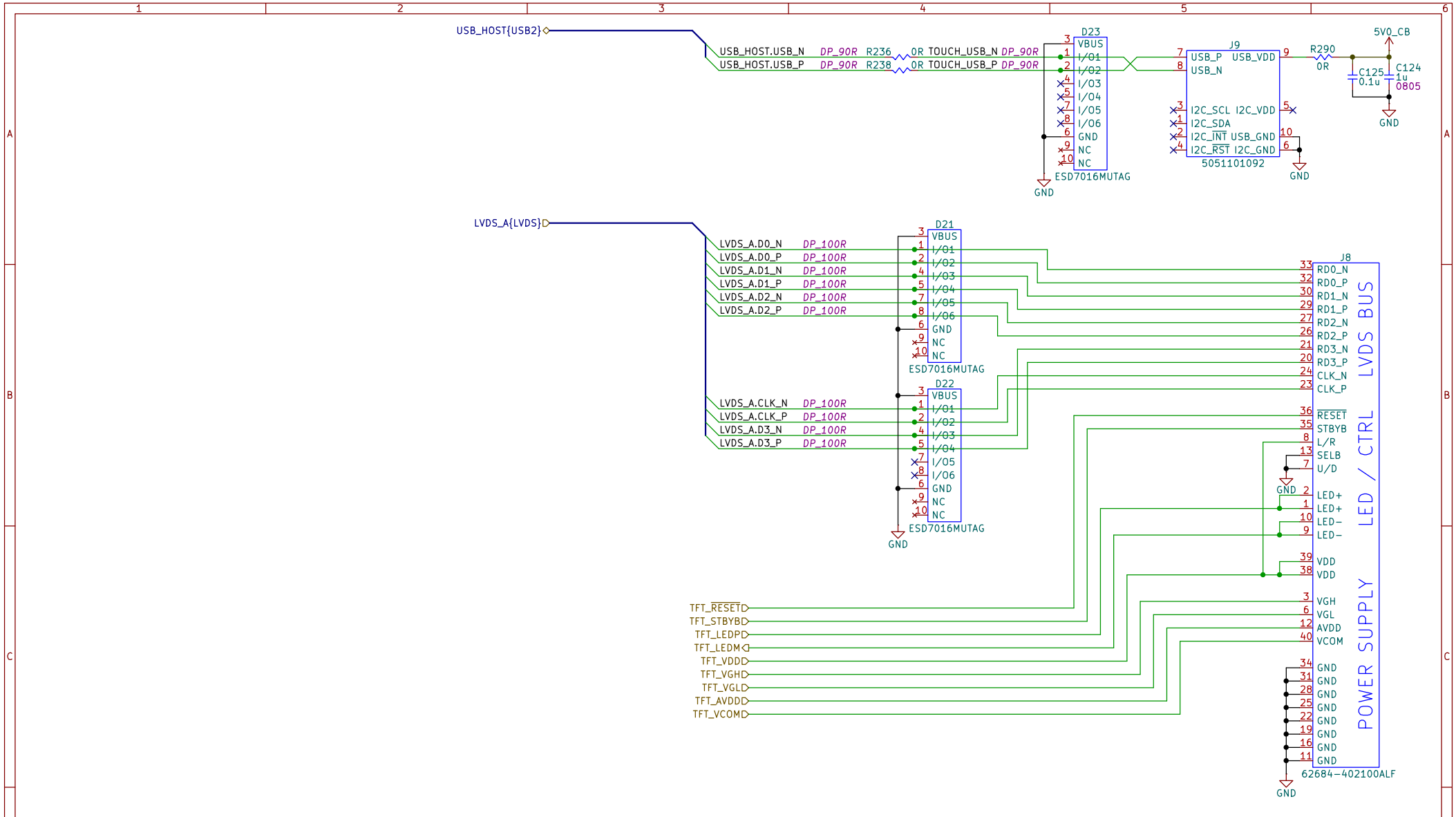

Resistors are 1% 1/16W 0402 unless otherwise noted
Capacitors are 10% 50V X7R 0402 unless otherwise noted

Revision	Change Order

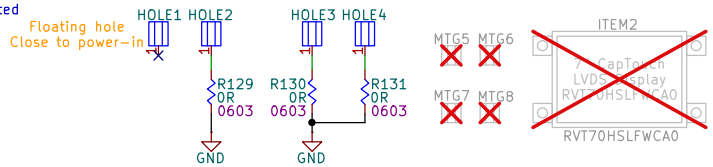

Designed by: Jean-Francois Bilodeau P.Eng #6022173 203-1690 Rue des quatre-saisons Sherbrooke, Canada, J1E0N2 KiCad Rev 9.0		Logo
Project: RPI CMx Carrier	Drawn by: Jean-Francois Bilodeau	Sheet Size: A4
Sheet Title: TFT_CONN.kicad_sch	Approved by: Not applicable	Sheet: 13 of 19
Date: 2026-02-17	BOM: RPI_CMx_Carrier_2.00-0A_BOM	Status: Released
		Current Revision: 2.00-0A

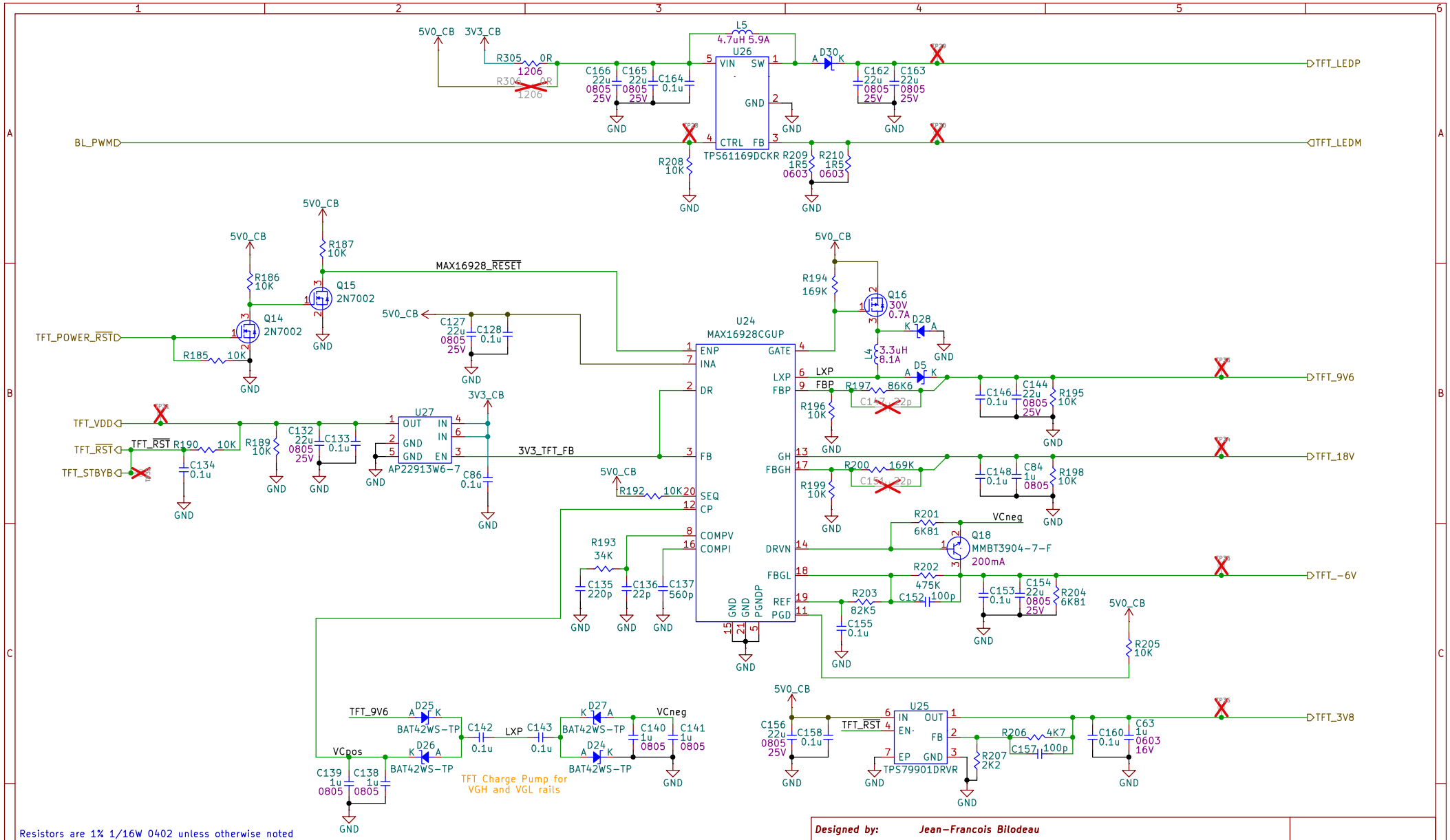

Resistors are 1% 1/16W 0402 unless otherwise noted
Capacitors are 10% 50V X7R 0402 unless otherwise noted

Revision	Change Order

Designed by: Jean-Francois Bilodeau
P.Eng #6022173
203-1690 Rue des quatre-saisons
Sherbrooke, Canada, J1E0N2
KiCad Rev 9.0

Logo

Project: RPI CMx Carrier	Drawn by: Jean-Francois Bilodeau	Sheet Size: A4
Sheet Title: TFT_POWER.kicad_sch	Approved by: Not applicable	Sheet: 14 of 19
Date: 2026-02-17	BOM: RPI_CMx_Carrier_2.00-0A_BOM	Status: Released
		Current Revision: 2.00-0A

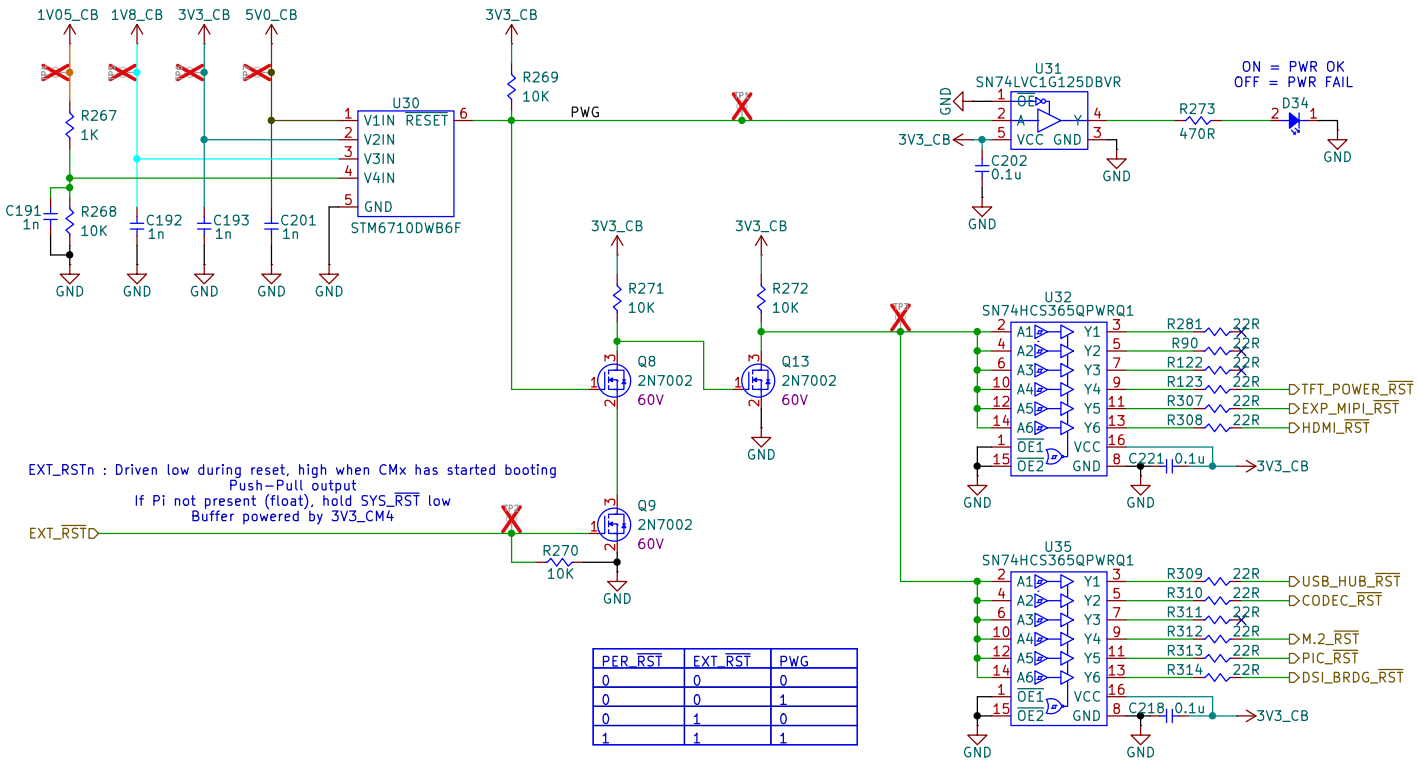

PER_RST	EXT_RST	PWG
0	0	0
0	0	1
0	1	0
1	1	1

Resistors are 1% 1/16W 0402 unless otherwise noted
Capacitors are 10% 50V X7R 0402 unless otherwise noted

Revision	Change Order

Designed by: Jean-Francois Bilodeau
P.Eng #6022173
203-1690 Rue des quatre-saisons
Sherbrooke, Canada, J1E0N2
KiCad Rev 9.0

Logo

Project: RPI CMx Carrier	Drawn by: Jean-Francois Bilodeau	Sheet Size: A4
Sheet Title: RESET_SUPERVISOR.kicad_sch	Approved by: Not applicable	Sheet: 15 of 19
Date: 2026-02-17	BOM: RPI_CMx_Carrier_2.00-0A_BOM	Status: Released
		Current Revision: 2.00-0A

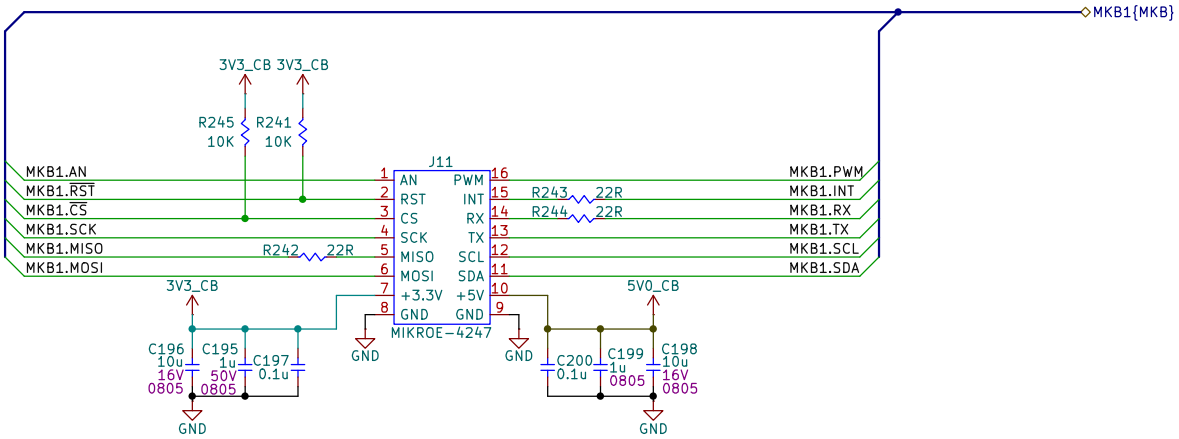

Revision	Change Order

Designed by: Jean-Francois Bilodeau P.Eng #6022173 203-1690 Rue des quatre-saisons Sherbrooke, Canada, J1E0N2 KiCad Rev 9.0		Logo Sheet Size: A4
Project: RPI CMx Carrier	Drawn by: Jean-Francois Bilodeau	Sheet: 16 of 19
Sheet Title: MikroBus.kicad_sch	Approved by: Not applicable	Status: Released
Date: 2026-02-17	BOM: RPI_CMx_Carrier_2.00-0A_BOM	Current Revision: 2.00-0A

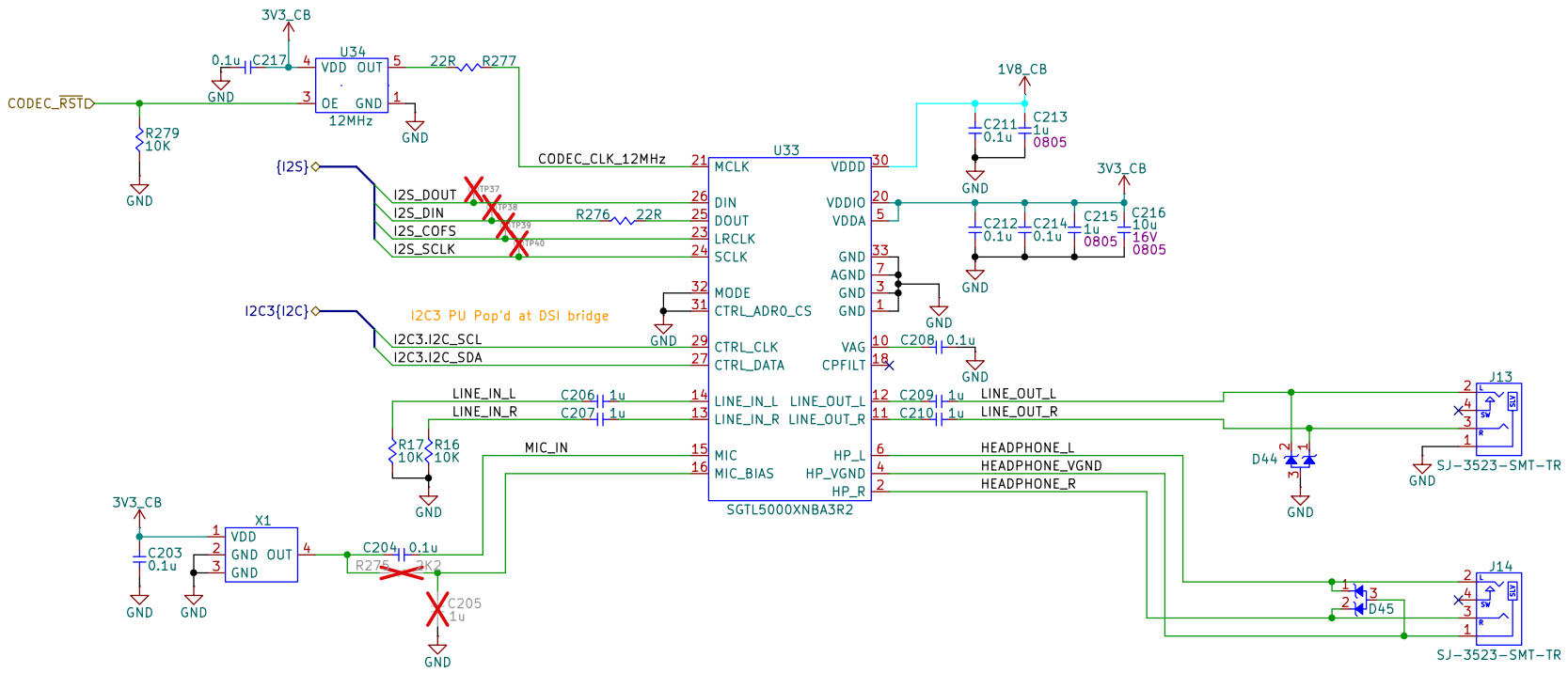

Revision	Change Order

Designed by: Jean-Francois Bilodeau P.Eng #6022173 203-1690 Rue des quatre-saisons Sherbrooke, Canada, J1E0N2 KiCad Rev 9.0		Logo
Project: RPI CMx Carrier	Drawn by: Jean-Francois Bilodeau	Sheet Size: A4
Sheet Title: AUDIO_CODEC.kicad_sch	Approved by: Not applicable	Sheet: 17 of 19
Date: 2026-02-17	BOM: RPI_CMx_Carrier_2.00-0A_BOM	Status: Released
		Current Revision: 2.00-0A

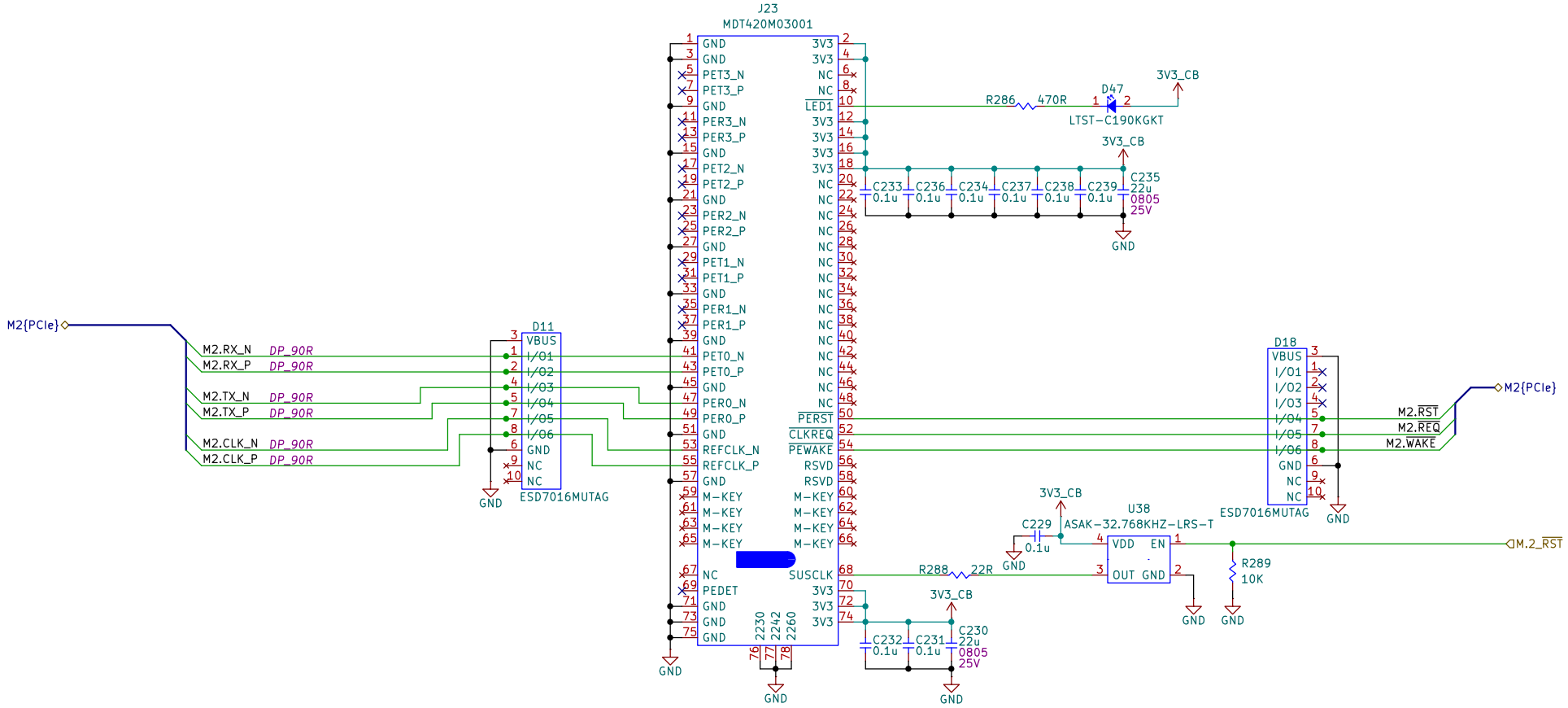

MTG9
9774025243R
GND

Revision	Change Order

Designed by: Jean-Francois Bilodeau
P.Eng #6022173
203-1690 Rue des quatre-saisons
Sherbrooke, Canada, J1E0N2
KiCad Rev 9.0

Logo

Project: RPI CMx Carrier	Drawn by: Jean-Francois Bilodeau	Sheet Size: A4
Sheet Title: M2_Expansion.kicad_sch	Approved by: Not applicable	Sheet: 19 of 19
Date: 2026-02-17	BOM: RPI_CMx_Carrier_2.00-0A_BOM	Status: Released
		Current Revision: 2.00-0A

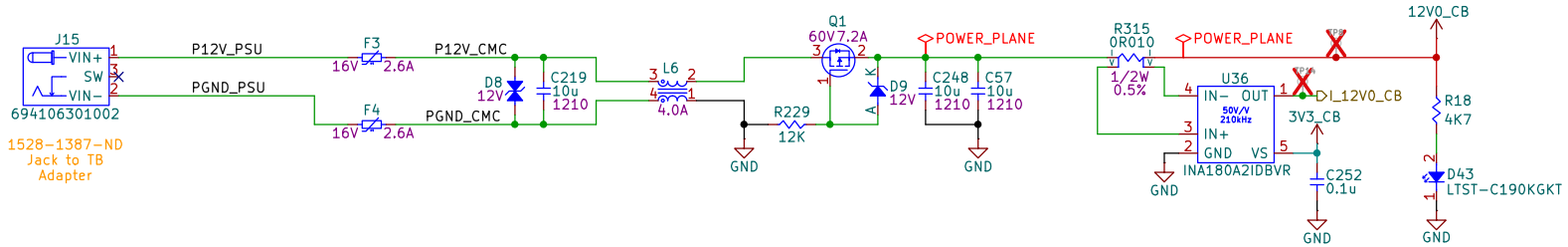

Revision	Change Order

Designed by: Jean−Francois Bilodeau P.Eng #6022173 203−1690 Rue des quatre−saisons Sherbrooke, Canada, J1E0N2 KiCad Rev 9.0		Logo Sheet Size: A4
Project: RPI CMx Carrier	Drawn by: Jean−Francois Bilodeau	Sheet: 20 of 19
Sheet Title: POWER INPUT.kicad_sch	Approved by: Not applicable	Status: Released
Date: 2026−02−17	BOM: RPI_CMx_Carrier_2.00−0A_BOM	Current Revision: 2.00−0A